FRAME ASSY RAHMEN-KPL CHASSIS CPL	from No / up to No WFN5RUG###2036265	**Figure** **Bild** 99707041551 **Figure**	TADANO **0100-21**

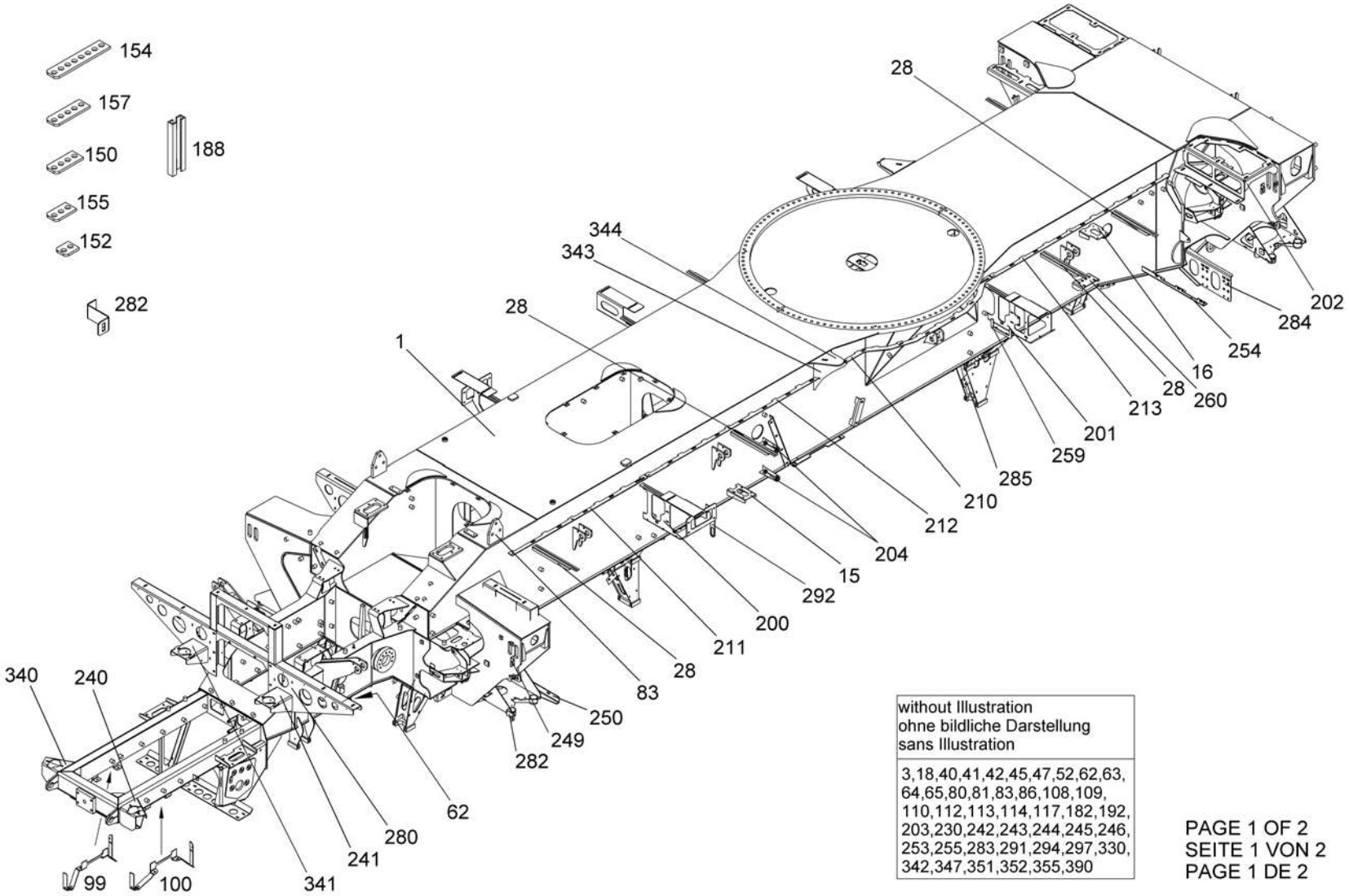

without Illustration ohne bildliche Darstellung sans Illustration
3,18,40,41,42,45,47,52,62,63, 64,65,80,81,83,86,108,109, 110,112,113,114,117,182,192, 203,230,242,243,244,245,246, 253,255,283,291,294,297,330, 342,347,351,352,355,390

PAGE 1 OF 2
SEITE 1 VON 2
PAGE 1 DE 2

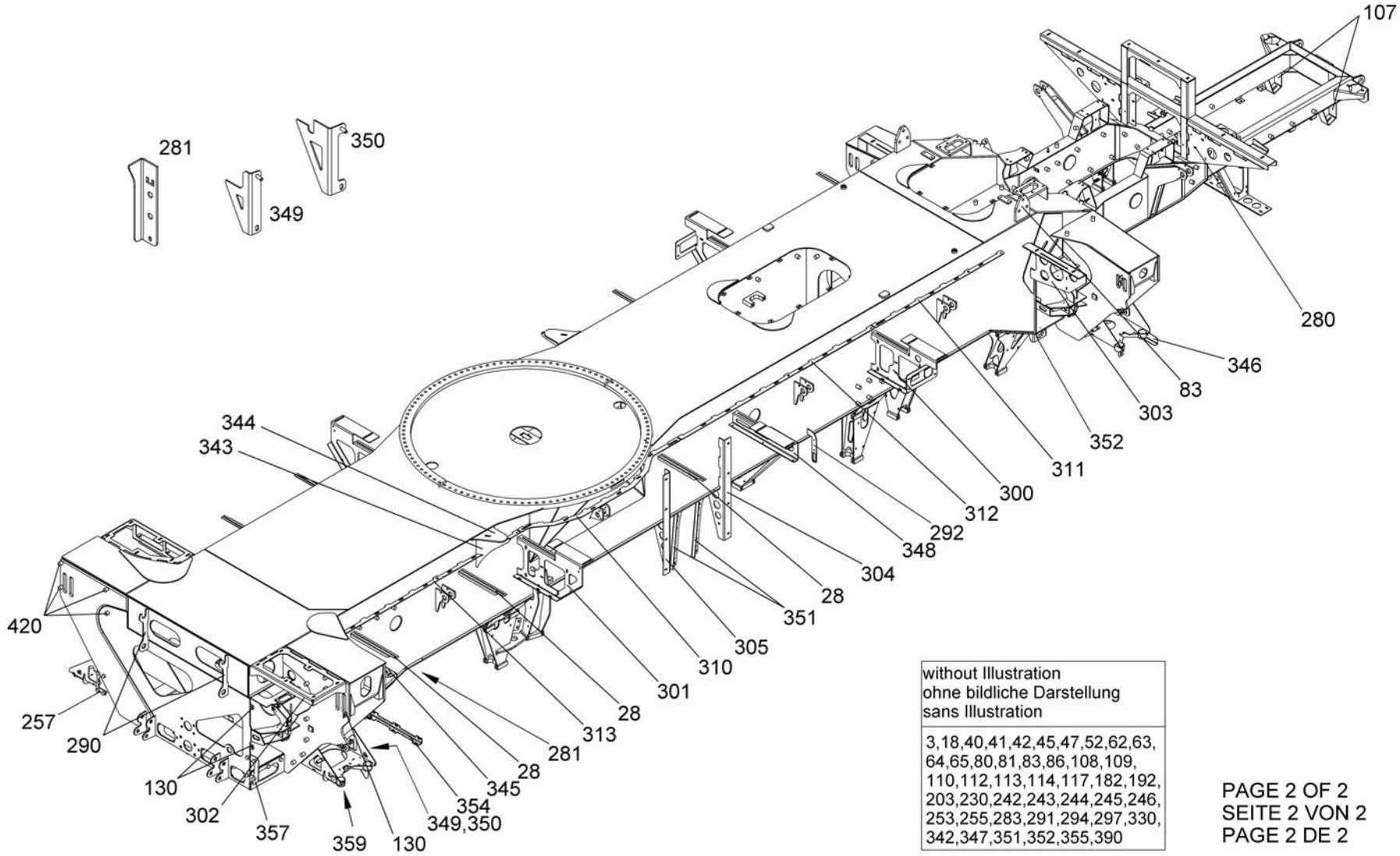

without Illustration ohne bildliche Darstellung sans Illustration
3,18,40,41,42,45,47,52,62,63, 64,65,80,81,83,86,108,109, 110,112,113,114,117,182,192, 203,230,242,243,244,245,246, 253,255,283,291,294,297,330, 342,347,351,352,355,390

PAGE 2 OF 2
SEITE 2 VON 2
PAGE 2 DE 2